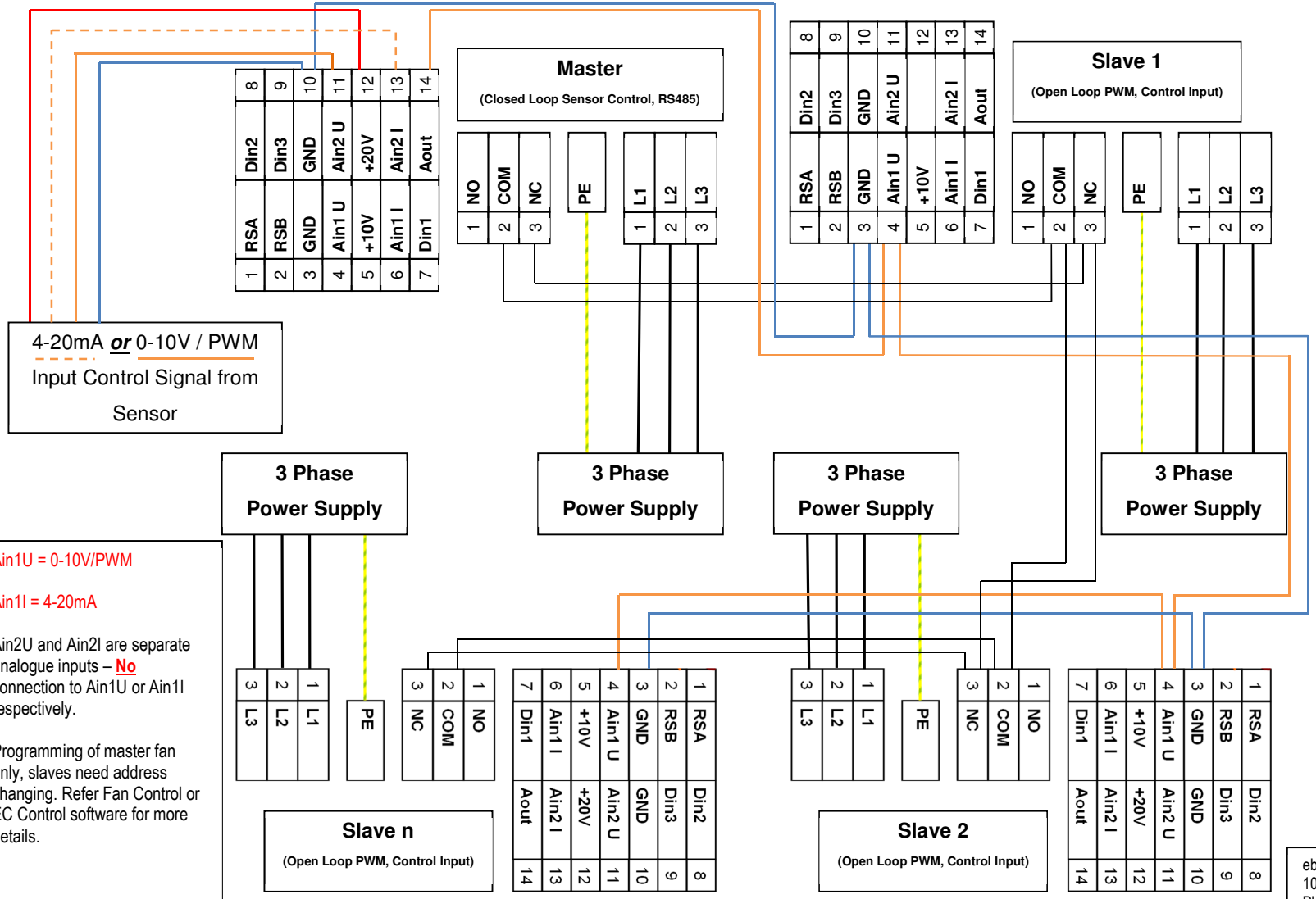

Ain1U = 0-10V/PWM

Ain1I = 4-20mA

Ain2U and Ain2I are separate analogue inputs – **No** connection to Ain1U or Ain1I respectively.

Programming of master fan only, slaves need address changing. Refer Fan Control or EC Control software for more details.

ebm-papst A&NZ Pty Ltd
10 Oxford Road Laverton North VIC 3026
Ph: (03) 9360 6400 Fax: (03) 9360 6464
email:sales@ebmpapst.com.au
www.ebmpapst.com.au