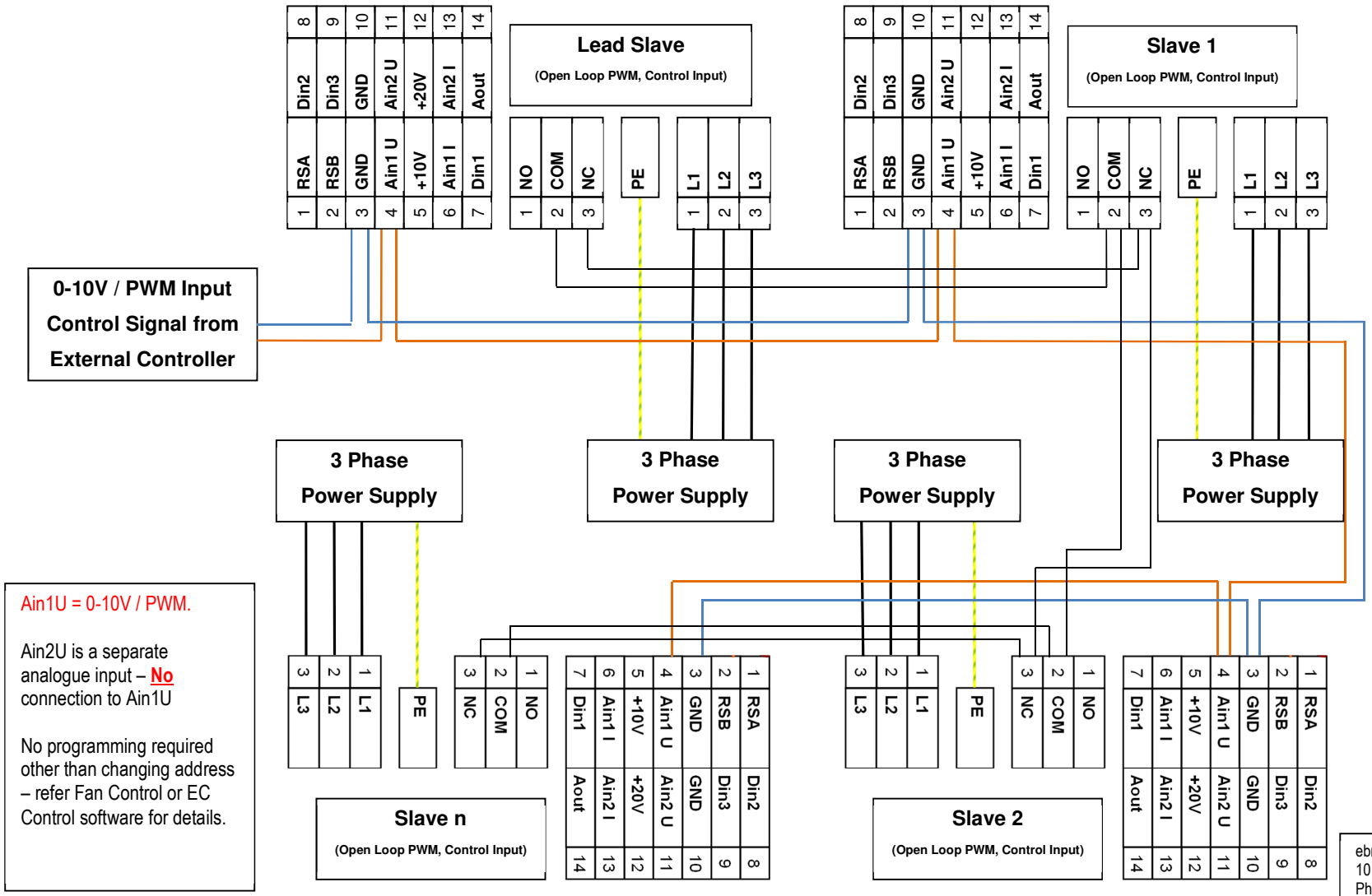

Ain1U = 0-10V / PWM.

Ain2U is a separate analogue input – **No** connection to Ain1U

No programming required other than changing address – refer Fan Control or EC Control software for details.

ebm-papst A&NZ Pty Ltd
10 Oxford Road Laverton North VIC 3026
Ph: (03) 9360 6400 Fax: (03) 9360 6464
email:sales@ebmpapst.com.au
www.ebmpapst.com.au