RS485 Daisy Chain Using Bluetooth® Connection

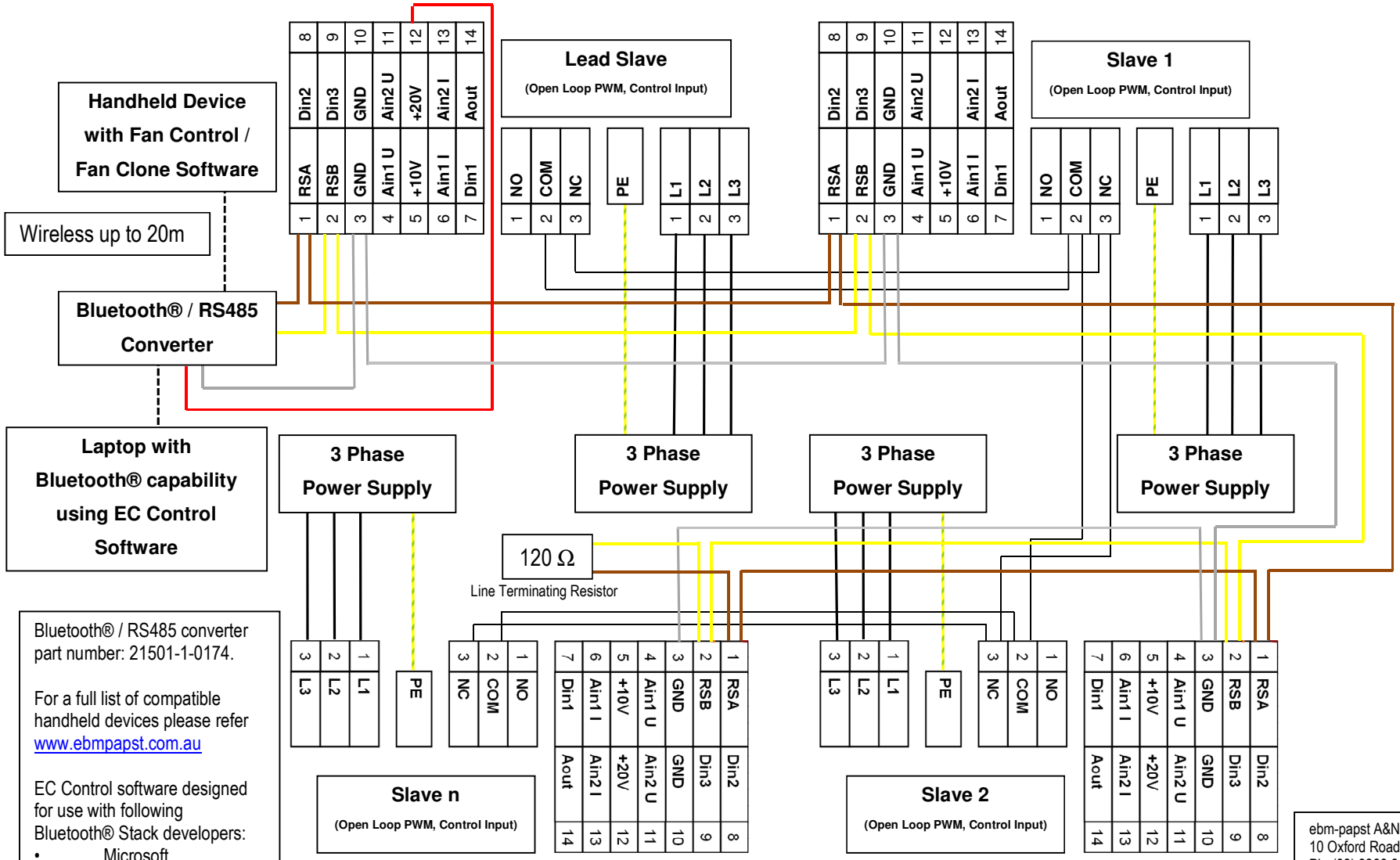

Bluetooth® / RS485 converter part number: 21501-1-0174.

For a full list of compatible handheld devices please refer www.ebmpapst.com.au

EC Control software designed for use with following Bluetooth® Stack developers:

- Microsoft
- Broadcom
- Toshiba

A MODBUS over serial line cable must be shielded. At one end of each cable its shield must be connected to protective ground.
An RS485-MODBUS must use a balanced pair (RSA / RSB) and a third wire (GND). AWG 24 is always sufficient for the MODBUS data.

ebm-papst A&NZ Pty Ltd
10 Oxford Road Laverton North VIC 3026
Ph: (03) 9360 6400 Fax: (03) 9360 6464
email:sales@ebmpapst.com.au
www.ebmpapst.com.au